KOVOSVIT MAS
machine your future

SP Line

CNC lathes

SP 280 / SP 430 / SP 630

www.kovosvit.cz

Industry and applications

Common Mechanical Engineering, Varied parts production

- Rotary parts, machining from bar diameter 90 mm

Electrotechnical industry

- Electric motor shafts, rotors

Printing Industry

- Components of printing machines

Automotive / Agricultural Machines

- Connectors, Flanges, Shafts

Transport and railway industry

- railway axles, long and heavy shafts, large flange part

Machine highlights **SP 280**

- Five technological variants of each machine size enable flexible choice of optimum machine variant, adapted to your technological requirements, from small-batch to specialized mass production
- Solid machine base and bed guarantee high machine rigidity
- Distortions of mechanical machine parts are verifi ed by means of a numerical fi nite elements method – FEM
- Dynamics and stability of axis motion are checked by means of advanced computation methods
- Spindle units enable machining with the high performance
- Synchronous integrated spindle motors provide the high dynamics of spindle functions and a powerful rotary axis C
- Carriages of linear axes, the right headstock or tailstock body move on the rolling guideways and guarantee high accuracy of positioning and interpolated motion of axes and carriages
- Rigidity of the upper carriage three-axis version is emphasized by virtual motion of axis Y1 which is composed of interpolation of real axes X1 and Y' making an angle of 30 degrees
- Programmable tailstock displacement reduces interventions of operating staff in machining process otherwise needed
- Optional applicable state-of-the-art control systems by SINUMERIK 840D sl, GE FANUC 0i and GE FANUC 30i guarantee excellent control properties and programmer comfort
- The machines meet your expectations in terms of easy operation including integrated programming at workshop

- Max. turning dia.: 280 mm
- Max. turning length: 550 mm
- Max. Workpiece weight: 350 kg (max. 1000 rpm)

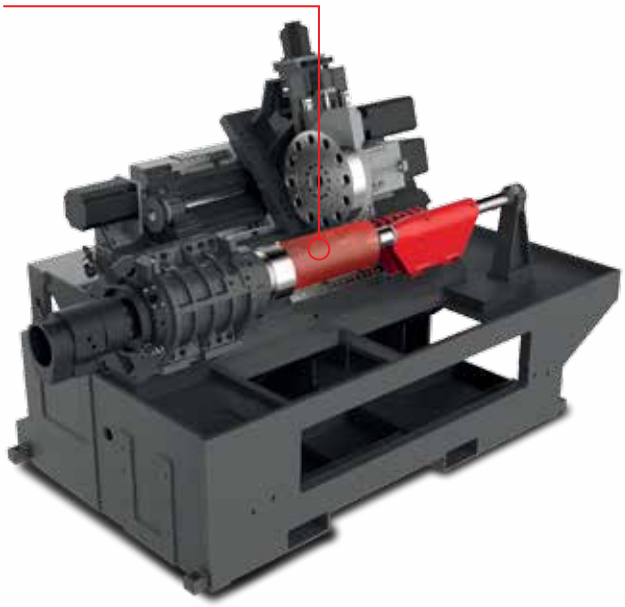

HIGH PRECISION

HIGH PRODUCTIVITY

ECO GREEN PLANET

SP 280 A6 SIEMENS, HEIDENHAIN

(belt drive)

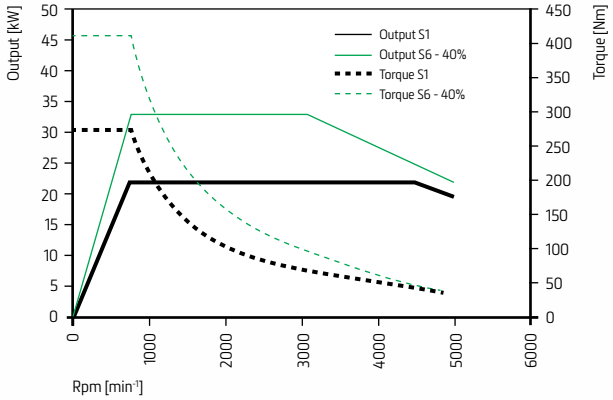

SP 280 A8 SIEMENS, HEIDENHAIN

(belt drive)

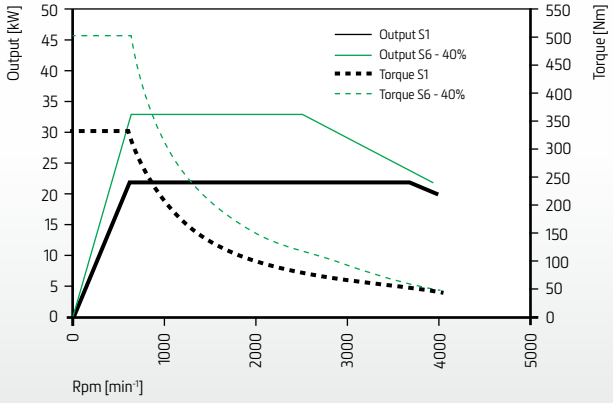

SP 280 A6, SIEMENS, HEIDENHAIN

(motor spindle)

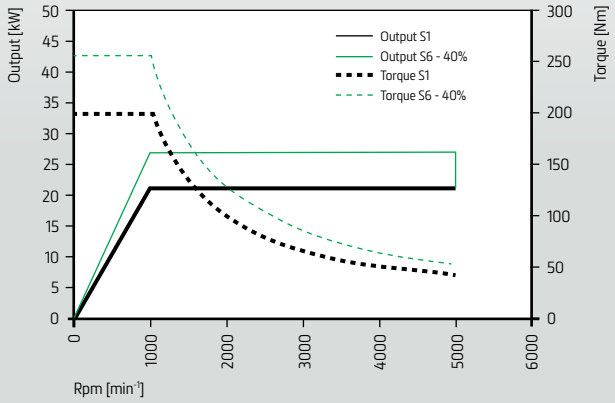

SP 280 SUBSPINDLE A5 SIEMENS, HEIDENHAIN

(motor spindle)

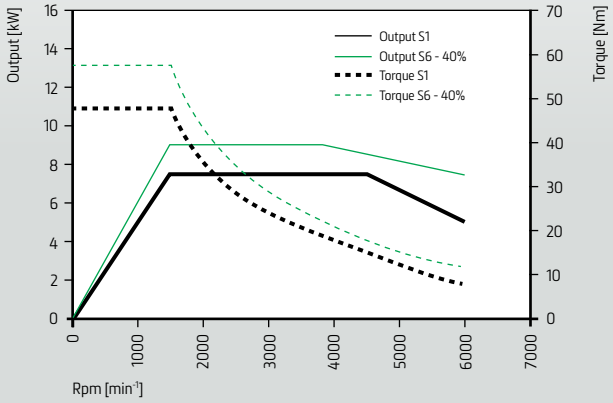

Machine basic concept **SP 280**

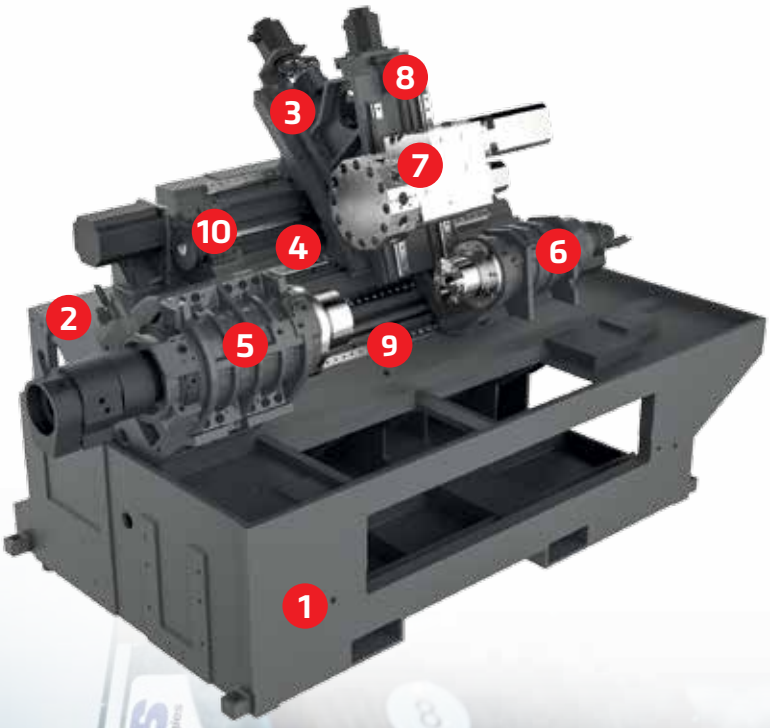

1 | Machine foundation
2 | Bed
3 | Slide - Y'-axis feed
4 | Slide - Z1 -axis feed
5 | Main spindle
6 | Counter spindle
7 | Tool head
8 | Rolling guideways - X1 -axis
9 | Rolling guideways - ZS -axis
10 | Rolling guideways - Z1 -axis

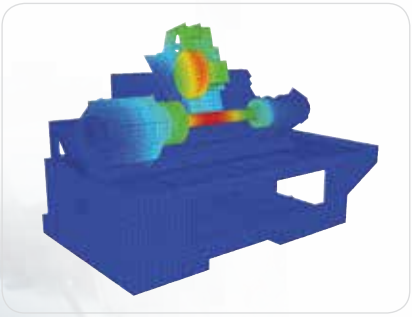

FEM model

Machine frame has been optimised regarding static rigidity and dynamic properties by means of a fi nite elements method.

REVOLUTIONS OF THE LEFT SPINDLE

S1	Revolutions of the left spindle
S2	Revolutions of the right spindle
S3	Revolutions of the tool spindle for the upper head
C1	Rotary axis C of the left spindle
C2	Rotary axis C of the right spindle
X1	Linear axis of the upper support (perpendicular to the axis of the left spindle)
Z1	Linear axis of the upper support (parallel to the axis of the left spindle)
Y	Linear axis of Y upper support
ZS	Linear axis of the right spindle – tailstock

TECHNOLOGY VARIANTS

TYPE	VERSION	SPINDLE	CONTROL SYSTEM
SP 280	S1, X1, Z1	22 kW / A6 | 22 kW / A8	SIEMENS / HEIDENHAIN
SP 280 MC	S1, C1, X1, Z1, S3	21 kW / A6	SIEMENS / HEIDENHAIN
SP 280 Y	S1, C1, X1, Z1, Y, S3	21 kW / A6	SIEMENS / HEIDENHAIN
SP 280 SMC	S1, S2, C1, C2, X1, Z1, ZS, S3	21 kW / A6	SIEMENS / HEIDENHAIN
SP 280 SY	S1, S2, C1, C2, X1, Y1, Z1, ZS, S3	21 kW / A6	SIEMENS / HEIDENHAIN

Definition of machine kinematic solution

SP 280

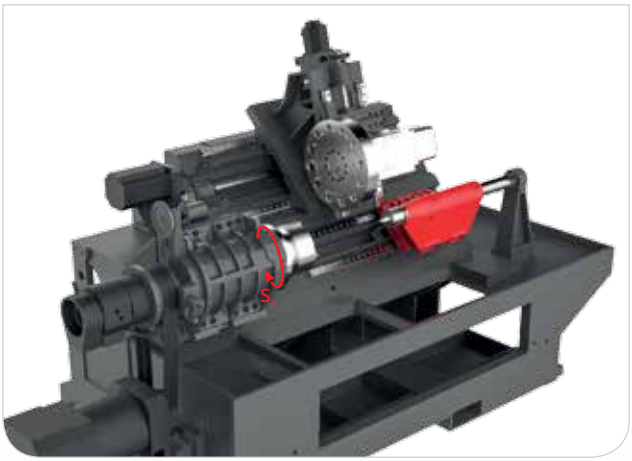

SP 280 **MC**

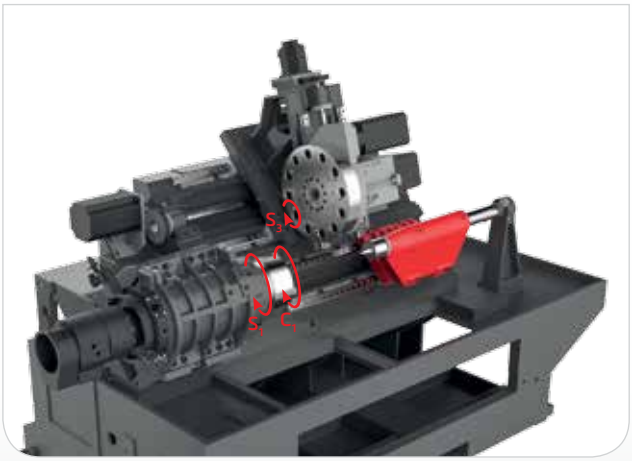

SP 280 **SMC**

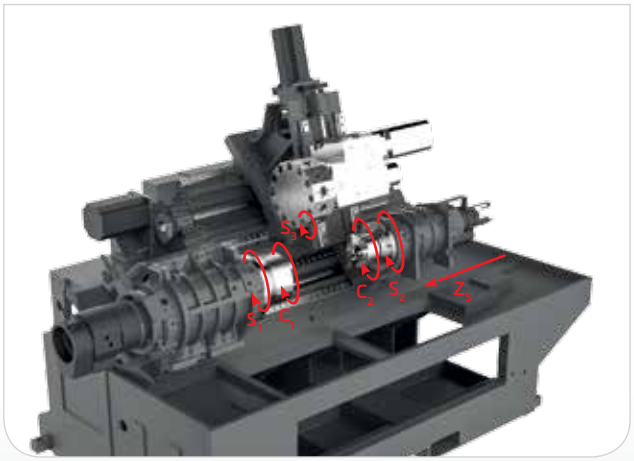

SP 280 **Y**

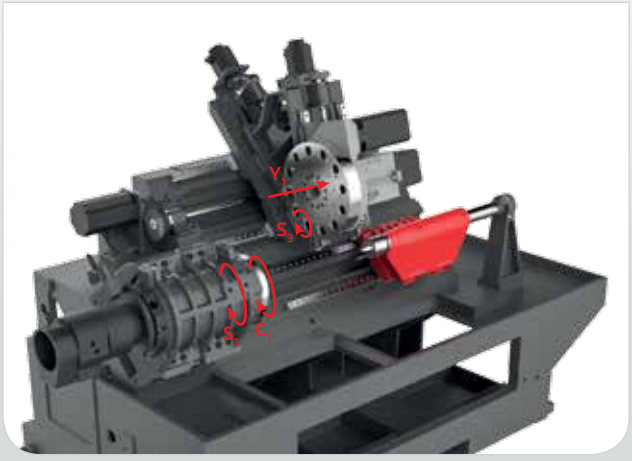

SP 280 **SY**

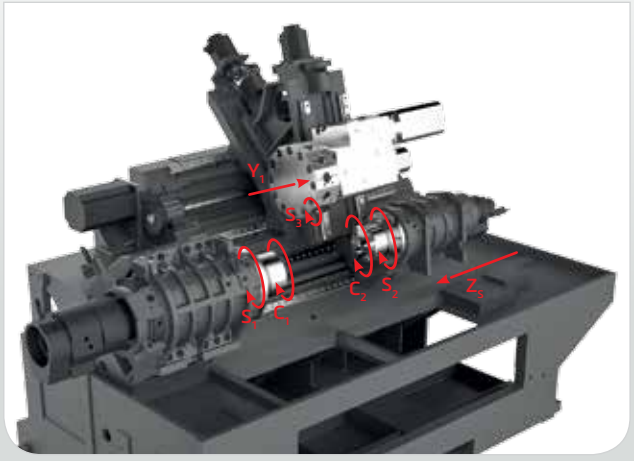

Demonstration technology **SP 280**

Nut (SP 280 Y)			
CYCLE TIME			
1. operation	2. operation	3. operation	**Total time**
1 min	1 min	2 min	**4 min**

Cutting conditions	Material: 2CrMo4
	Semi-product: 184×75×115
Roughing	Vc=150 m/min^{-1} f=0,15 / rev
Drilling	Drill dia. Ø 10.1 mm S=2000 min^{-1} f=0.1 / rev. Drill dia. Ø 43 mm S=1000 min^{-1} f=0.12 / rev.
Chamfering	Ø 16 mm S=2000 min^{-1} f=0.1 / rev.
Hole for the thread	Vc=120 m/min^{-1} f=0,15 / rev.
Chamfering of the rear edge for threading	Vc=120 m/min^{-1} f=0,15 / rev.
Threading Rd50×7	S=800 min^{-1} f=7 / rev.

Machine highlights **SP 430**

- Modular design of the machine
- Option with Y-axis, lower turret with driven tools and subspindle
- High stroke of Y-axis
- High rigidity of the machine
- High torque of the spindle – eff ective turning on maximum diameter
- Dynamics and high speed in all axes – short incidental times, more eff ective machine utilization
- Use of roller guideways in all axes – longterm high-precision machining
- Control system SIEMENS – SINUMERIK 840DsI (SOLUTION LINE) with drives of SINAMICS and FANUC Series 0iTD
- On customer's request Heidenhain CNC PILOT 640 line
- The machine is equipped with a safety system integrated in the control system - SAFETY INTEGRATED of the Siemens company, DUAL CHECK SAFETY of the FANUC company or auxiliary safety modules when HEIDENHAIN control technology is in use

- Max. turning dia.: 550 mm
- Max. turning length: 2 500 mm
- Max. Workpiece weight: 1 100 Kg (max. 400 rpm)

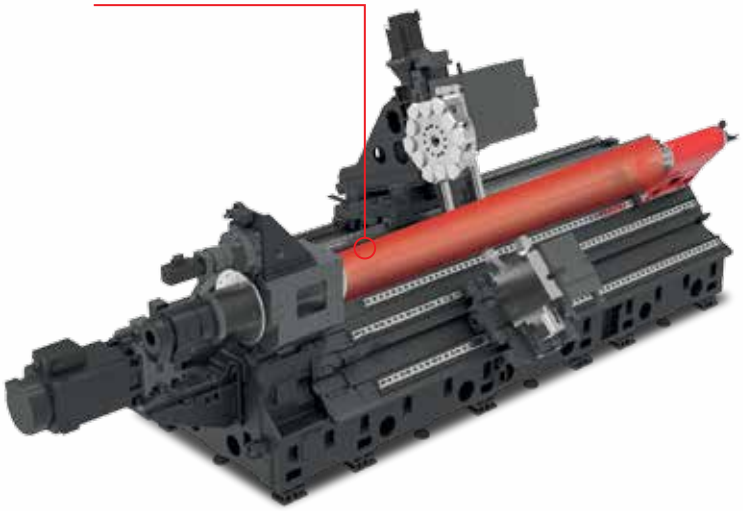

SP 430 A8 SIEMENS, HEIDENHAIN

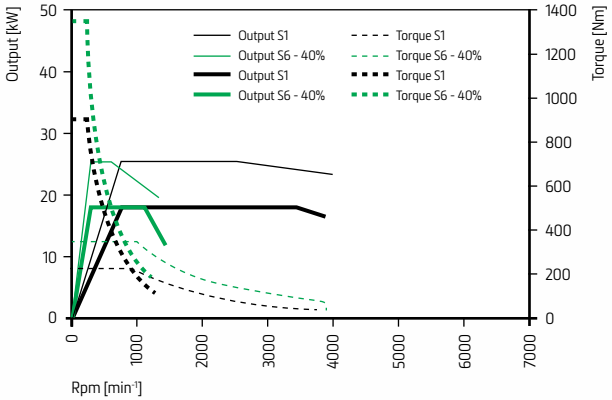

SP 430 A11 SIEMENS, HEIDENHAIN

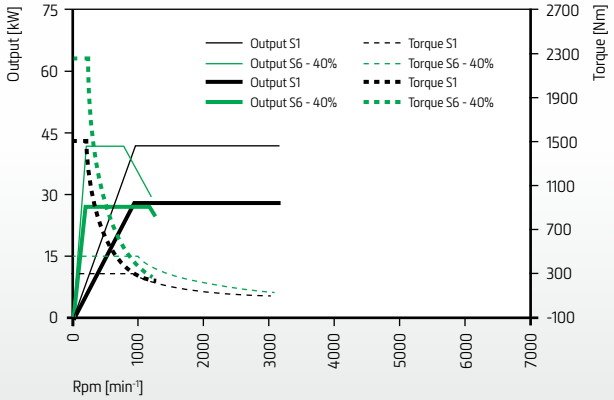

SP 430 SUBSPINDLE AS

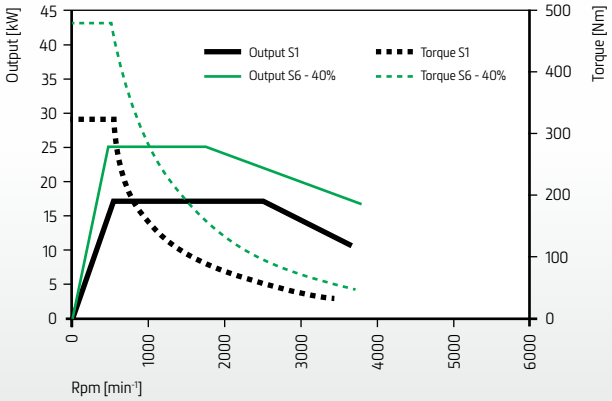

SP 430 A11 FANUC

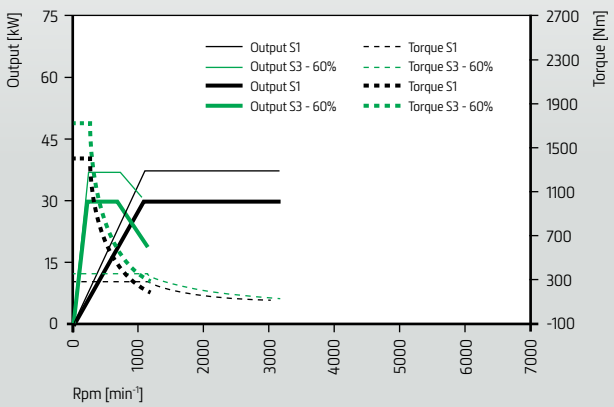

SP 430 A8 FANUC

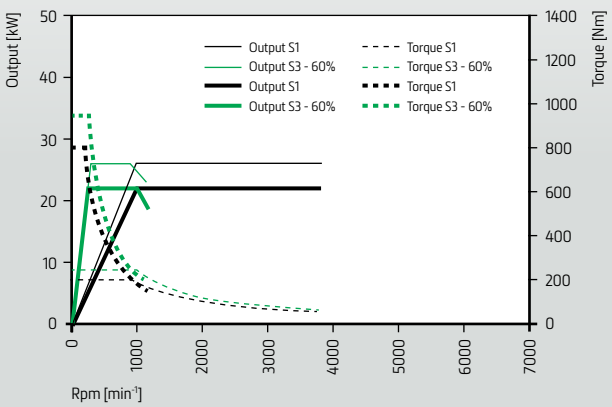

Machine basic concept **SP 430**

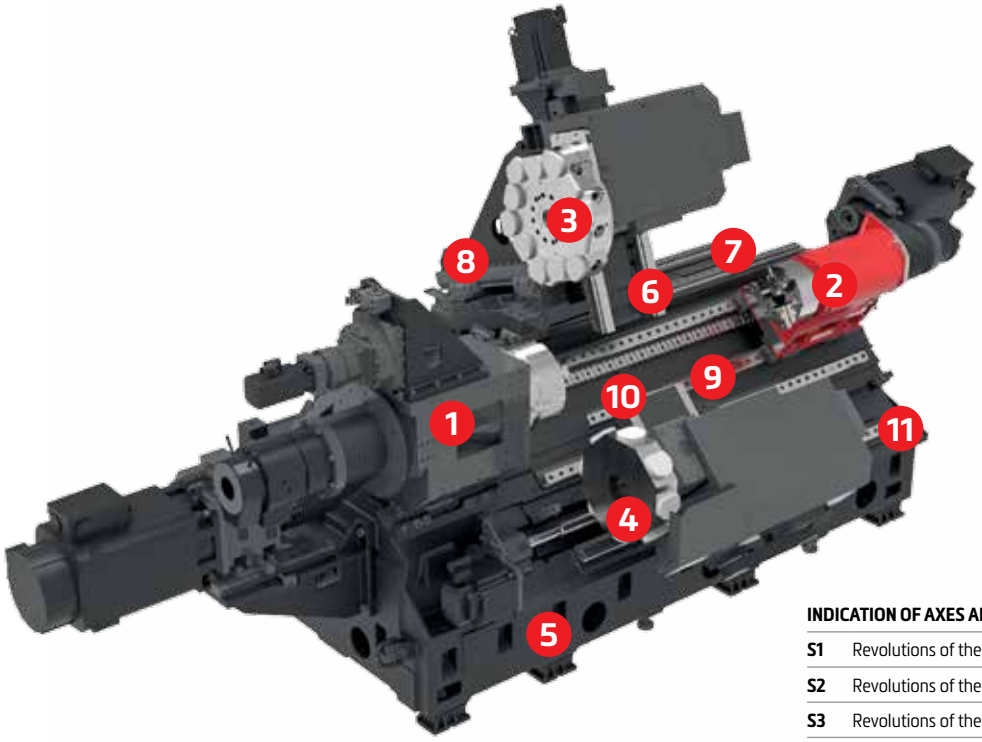

1 | Main spindle
2 | Counter spindle
3 | Upper tool turret
4 | Lower tool turret
5 | Bed
6 | Roller guideway X1
7 | Roller guideway Z1
8 | Roller guideway Y
9 | Roller guideway ZS
10 | Sliding guideways X2
11 | Roller guideway Z2

INDICATION OF AXES AND SPINDLES)

S1	Revolutions of the left spindle
S2	Revolutions of the right spindle
S3	Revolutions of the tool spindle for the upper head
S4	Revolutions of the tool spindle for the lower head
C1	Rotary axis C of the left spindle
X1	Linear axis of the upper support (perpendicular to the axis of the left spindle)
Z1	Linear axis of the upper support (parallel to the axis of the left spindle)
Y	Linear axis of Y upper support
X2	Linear axis of the lower support (perpendicular to the axis of the left spindle)
Z2	Linear axis of the lower support (parallel to the axis of the left spindle)
ZS	Linear axis of the right spindle – tailstock
W1	Linear axis of the upper steady rest (on the same guideway with the tailstock)
W2	Linear axis of the lower steady rest (on the lower independent guideway)

TECHNOLOGY VARIANTS

TYPE		VERSION	SPINDLE	CONTROL SYSTEM
SP430	1100	S1, X1, Z1	17kW / A8 | 28kW / A11	SIEMENS / HEIDENHAIN / FANUC
SP430 MC	1100	S1, C1, X1, Z1, S3	17kW / A8 | 28kW / A11	SIEMENS / HEIDENHAIN / FANUC
SP430 Y	1100	S1, C1, X1, Z1, Y, S3	17kW / A8 | 28kW / A11	SIEMENS / HEIDENHAIN / FANUC
SP430 / 2	1100	S1, X1, Z1, X2, Z2	28 kW / A11	SIEMENS
SP430 MC / 2	1100	S1, C1, X1, Z1, X2, Z2, S3	28 kW / A11	SIEMENS
SP430 Y / 2	1100	S1, C1, X1, Z1, Y, X2, Z2, S3	28 kW / A11	SIEMENS
SP430 / L2	1100	S1, X1, Z1, X2, W2	28 kW / A11	SIEMENS
SP430 MC / L2	1100	S1, C1, X1, Z1, X2, W2, S3	28 kW / A11	SIEMENS
SP430 Y / L2	1100	S1, C1, X1, Z1, Y, X2, W2, S3	28 kW / A11	SIEMENS
SP430 SMC / 2	1100	S1, C1, X1, Z1, X2, Z2, S2, S3, S4, ZS	28 kW / A11	SIEMENS
SP430 SY / 2	1100	S1, C1, X1, Z1, Y, X2, Z2, S2, S3, S4, ZS	28 kW / A11	SIEMENS
SP430 / L2	2500	S1, X1, Z1, W2	28 kW / A11	SIEMENS
SP430 MC / L2	2500	S1, C1, X1, Z1, S3, W2	28 kW / A11	SIEMENS
SP430 Y / L2	2500	S1, C1, X1, Z1, Y, S3, W2	28 kW / A11	SIEMENS

Definition of machine kinematic solution

SP 430 1100

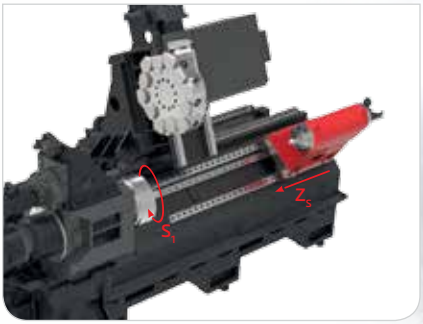

SP 430 1100 / 2

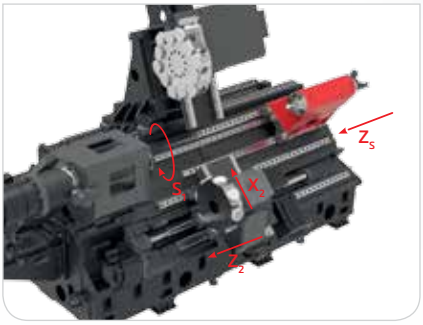

SP 430 1100 **MC**

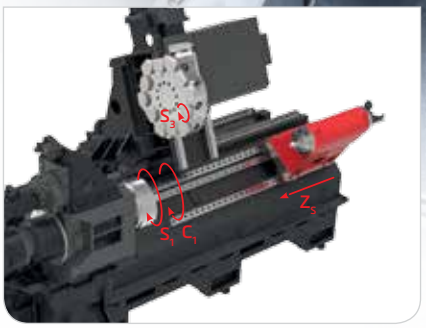

SP 430 1100 **MC / 2**

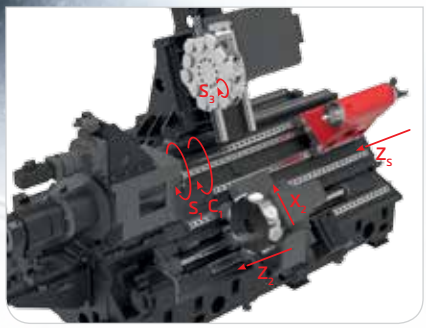

SP 430 1100 **Y**

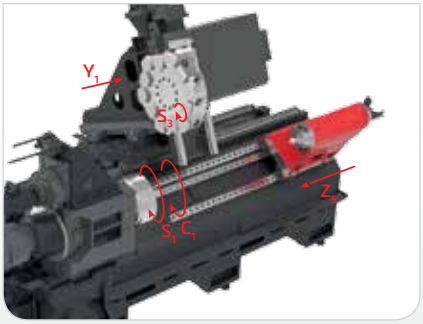

SP 430 1100 **Y / 2**

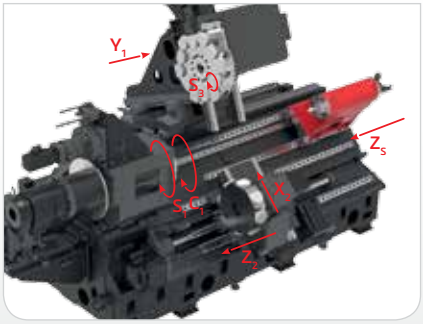

SP 430 1100 **SY / 2**

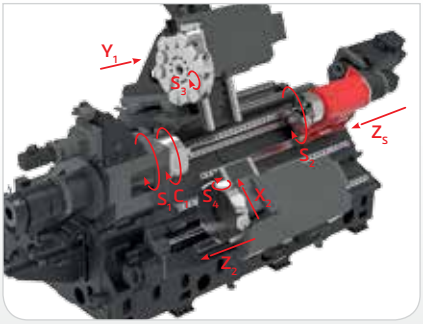

SP 430 2500 / L2

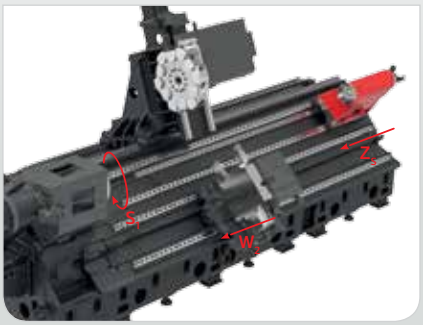

SP 430 2500 **MC / L2**

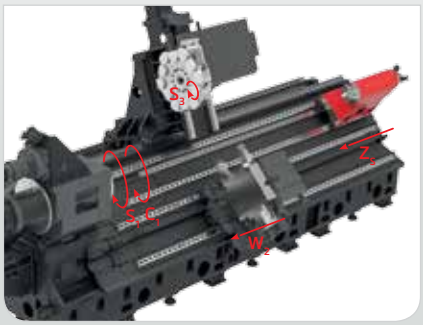

SP 430 2500 **Y / L2**

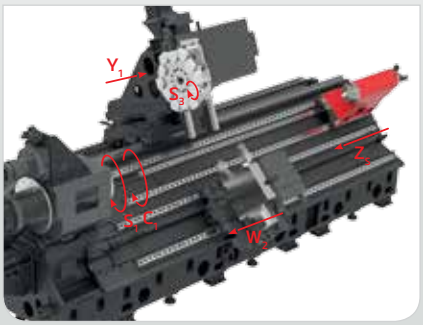

Complete machining **SP 430**

1 TURRET – 1 SPINDLE

CYCLE TIME 30,2 min

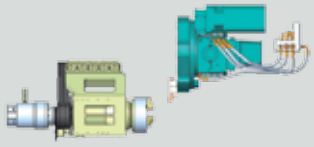

2 TURRETS – 1 SPINDLE

CYCLE TIME 20 min

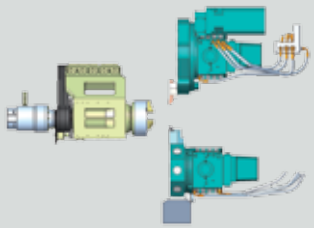

SP 430 Y/2

Upper turret

FIXED HOLDERS, TOOLS

NAME	HOLDER	TOOL	OPERATION
T4 Side, roughing	B1 50×32	PCLNL 32×25 P16	Roughing of shape
T4 Side, fi nishing	B1 50×32	PCLNL 32×25 P16	Finishing of shape
T6 Necking tool w=8	B1 50×32	LF123L25-3225BM N123L2-0800-0005-GM	Necks
T10 Necking tool r=2	B1 50×32	LF123 H13-2525 BM N123H2-0400-RM	Slot

Upper turret

DRIVEN HOLDERS, TOOLS

NAME	HOLDER	TOOL	OPERATION
T9 Cutter dia. 12	EWS angle contersunk ER 40×12	Cutter dia. 12 (tvrdokov) R216.34-12030-AC26N	Milling
T11 Drill dia. 10	EWS angle countersunk ER 40×10	R840-1000-30-A0A	Drilling

Lower turret

FIXED HOLDERS, TOOLS

NAME	HOLDER	TOOL	OPERATION
T1 Side, roughing	C3 50×25/32	PCLNL 32×25 P16	Roughing of shape
T2 Necking tool r=2	C3 50×25/32	LF123 H13-2525 BM N123H2-0400-RM	Slot

WORKPIECE:
It is a shaft workpiece clamped into the chuck and supported by tailstock. Manufacturing technology represents turning and milling operations. Synchronous and independent application of different turning, milling and drilling operations is used within machining cycle. Roughing operations are carried out from both turrets simultaneously.

RAW MATERIAL:
Steel dia. 120 × 400, material (DIN C50/EN 2C45)

The raw material is provided with the shoulder Ø100/30 and Ø110/20 and drilled.

OPERATION TIME - SP 430 Y/2:
Cycle time: 20 min | Time for preparation: 150 min

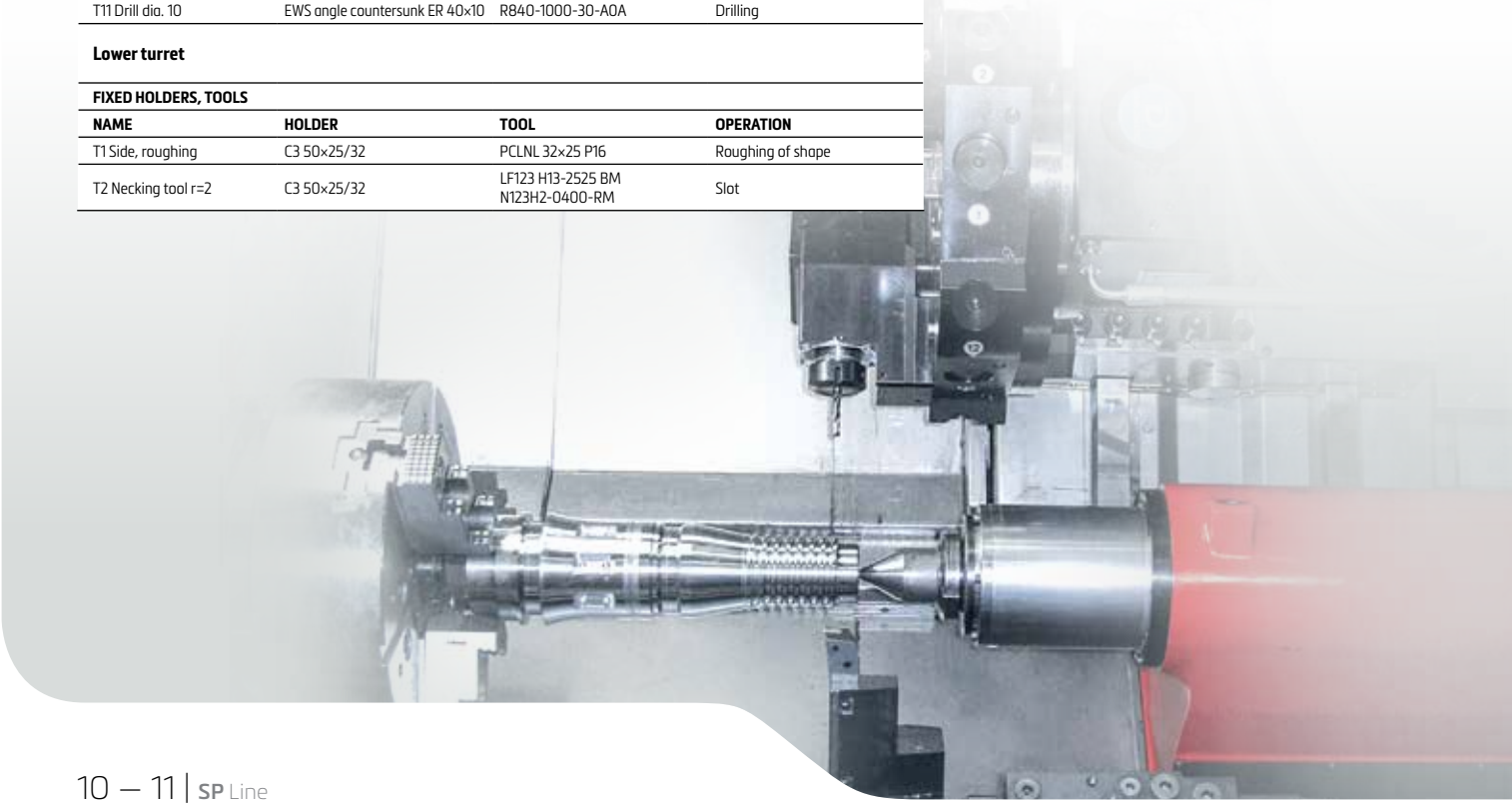

Machine highlights **SP 630**

- The machine tool for machining of large shaft parts especially for transport, railway and mining industry
- The machine base consists of a massive cast-iron bedding
- Linear guideways in all axes
- Five lengths types
- Max. turning length: 1700 / 2200 / 3200 / 4700 / 6100 mm
- Max. turning diameter: 1020 mm
- Up to five technological options
- Axe "Y", two upper turrets, one lower turret, steady-rest, counter spindle
- Identical spindles with the gearbox and belt drive
  - Power S1: 41 kW
  - Torque: 2736 Nm
- Turrets with 12 positions and live-tool
  - Power S1: 8,2 kW
  - Torque: 48 Nm
- Up to three stedy-rests options (depends on length of machine)
- Self-centring NC controlled steady rest with X axis slide: Ø 410
- Self-centring NC controlled steady rest without X axis slide: Ø 600
- Control system SIEMENS Sinumerik 840D sl

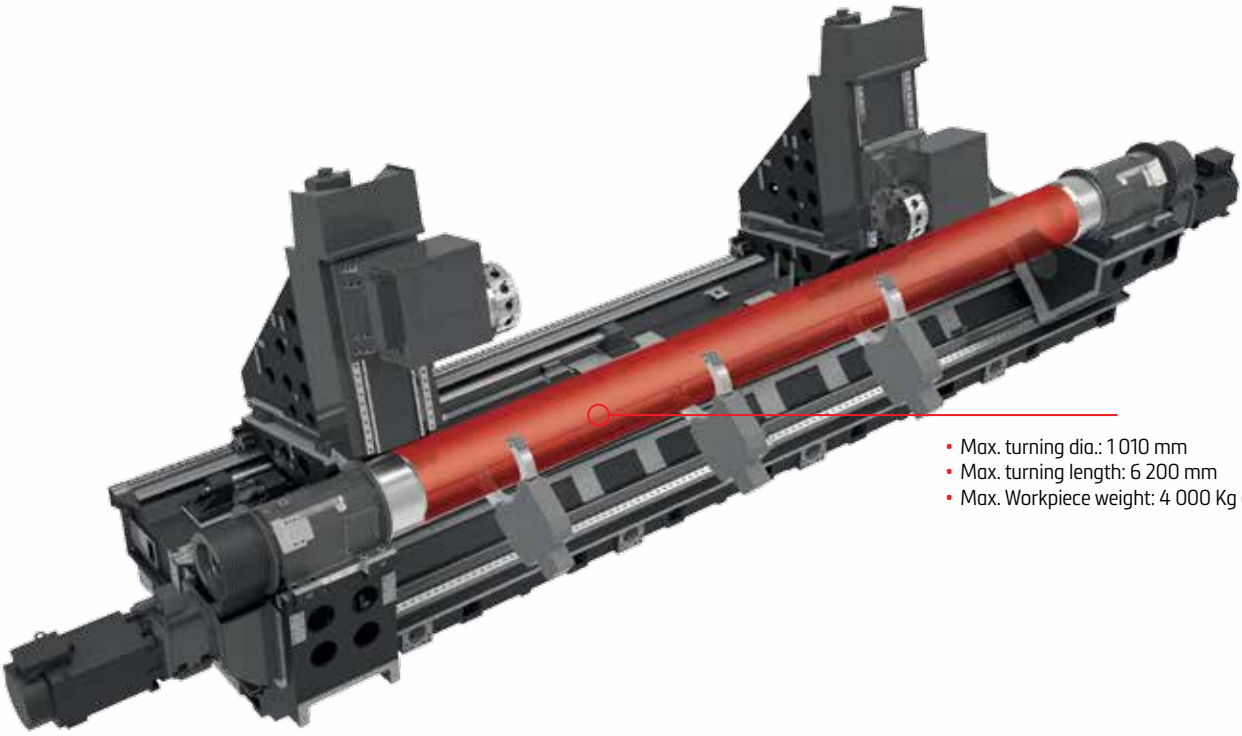

- Max. turning dia.: 1 010 mm
- Max. turning length: 6 200 mm
- Max. Workpiece weight: 4 000 Kg (max. 1000 rpm)

SP 630 WORKPIECE SPINDLE A11 SIEMENS

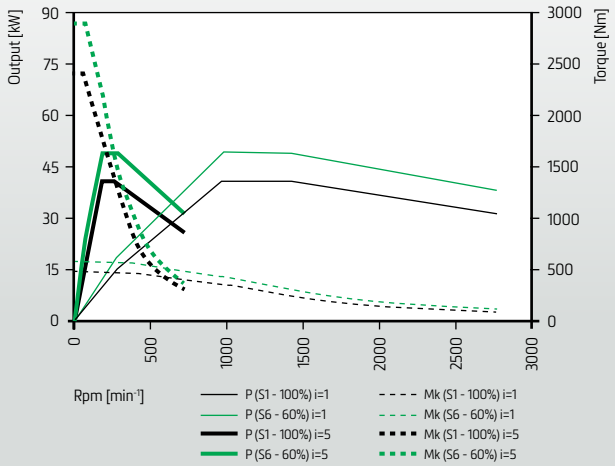

SP 630 SUBSPINDLE A11 SIEMENS

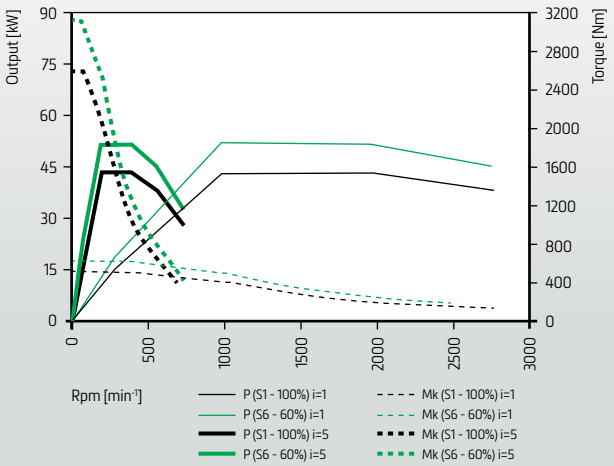

Machine basic concept **SP 630**

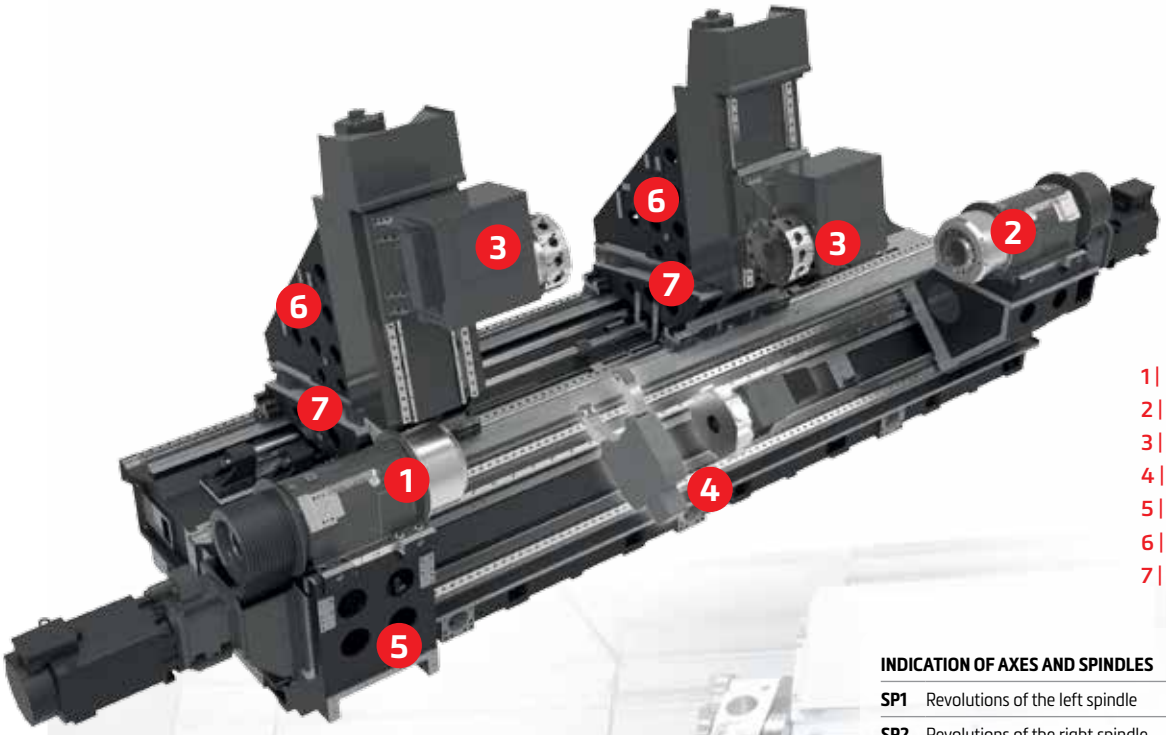

1 | Main spindle
2 | Counter spindle
3 | Upper tool turret
4 | Lower tool turret / lunette
5 | Bed
6 | Supports upper turrets
7 | Y axis upper supports

INDICATION OF AXES AND SPINDLES

SP1	Revolutions of the left spindle
SP2	Revolutions of the right spindle
SP3	Revolutions of the tool spindle for the upper right head
SP4	Revolutions of the tool spindle for the upper left head / the lower head
CM1	Rotary axis C of the left spindle
CM2	Rotary axis C of the right spindle
XM1	Linear axis of the upper right support (perpendicular to the axis of the right spindle)
XM2	Linear axis of the upper left support / the lower support (perpendicular to the axis of the left spindle)
ZM1	Linear axis of the upper right support (parallel to the axis of the right spindle)
ZM2	Linear axis of the upper left support / the lower support (parallel to the axis of the left spindle)
YM1	Linear axis of Y upper right support
YM2	Linear axis of Y upper left support
ZL1, ZL2, ZL3	Linear axis of the lower steady rest
ZMS	Linear axis of the spindle / tailstock

TECHNOLOGY VARIANTS

TYPE	VERSION	MACHINE LENGTH	CONTROLED AXIS	SPINDLE	CONTROL SYSTEM
SP630T	1 upper turret (+ lunette)*	1500, 2000, 3000	SP1, CM1, XM1, YM1, ZM1, SP3, ZMS (ZL1, ZL2)*	41kW/A11	Siemens
SP630S	1 upper turret (+ lunette)*	1500, 2000, 3000	SP1, CM1, SP2, CM2, XM1, YM1, ZM1, SP3, ZMS (ZL1, ZL2)*	41kW/A11	Siemens
SP630S	1 upper turret + 1 lower turret	1500, 2000, 3000	SP1, CM1, SP2, CM2, XM1, YM1, ZM1, SP3, XM2, ZM2, SP4, ZMS	41kW/A11	Siemens
SP630T	2 upper turrets (+ lunette)*	2000, 3000, 4500, 6000	SP1, CM1, XM1, YM1, ZM1, SP3, XM2, YM2, ZM2, SP4, ZMS (ZL1, ZL2, ZL3)*	41kW/A11	Siemens
SP630S	2 upper turrets (+ lunette)*	2000, 3000, 4500, 6000	SP1, CM1, SP2, CM2, XM1, YM1, ZM1, SP3, XM2, YM2, ZM2, SP4, ZMS (ZL1, ZL2, ZL3)*	41kW/A11	Siemens

( )* Option

Definition of machine kinematic solution

SP 630 T

1 upper turret / 1500, 2000, 3000

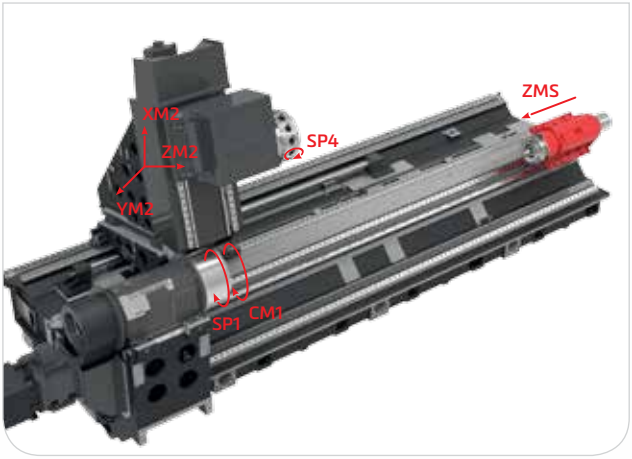

LUNETTES	
Turning length machines	**Selectable number lunettes**
1500	1
2000	1, 2
3000	1, 2
4500	1, 2, 3
6000	1, 2, 3

DMS DIRECT MEASURING SYSTEM

CIB CAST IRON BODY

SP 630 S

1 upper turret / 1500, 2000, 3000

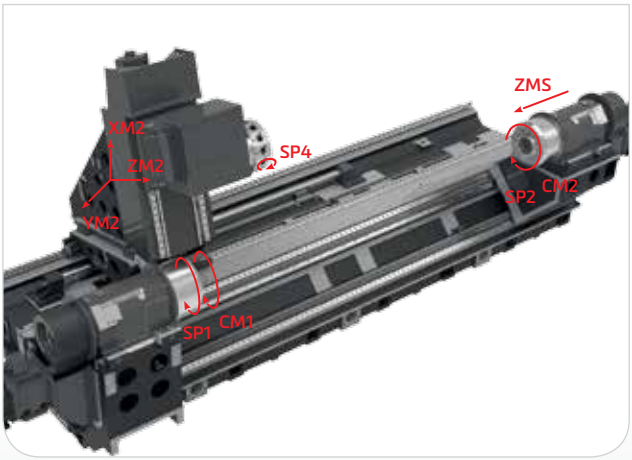

SP 630 S / 2

1 upper turret + 1 lower turret / 1500, 2000, 3000

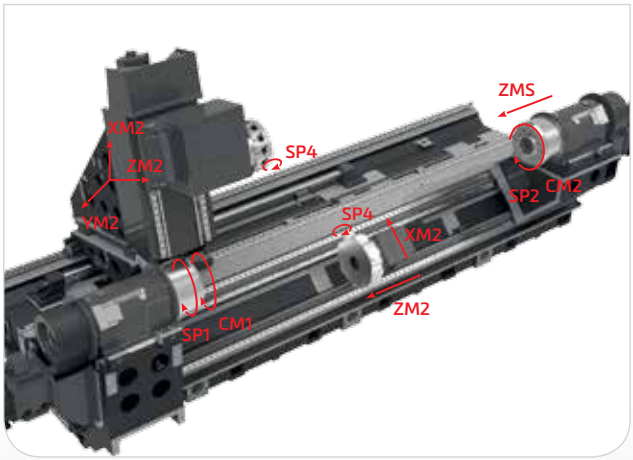

SP 630 T / U2

2 upper turrets / 2000, 3000, 4500, 6000

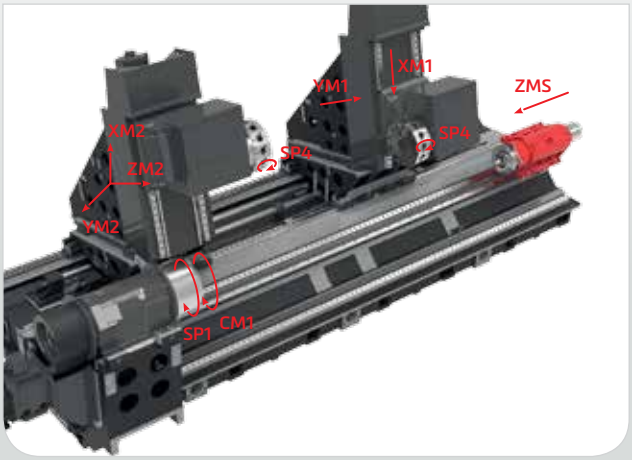

SP 630 S / U2

2 upper turrets / 2000, 3000, 4500, 6000

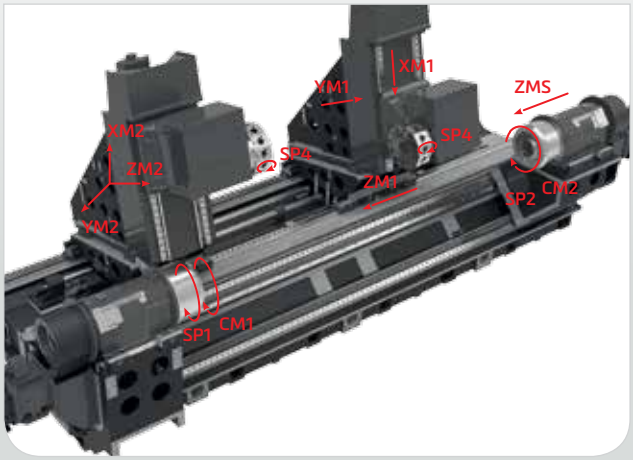

Accessories

STANDARD ACCESSORIES	SP 280	SP 430	SP 630
Tool turrets	✓	✓	✓
Adjustable automatic tailstock	✓	✓	✓
Direct measuring in X1 axis	✓	✓	✓
Direct measuring in X2 axis	✓	×	✓
Clamping cylinder including draw-back tube	✓	✓	✓
Absolute measuring of linear axes	✓*	✓*	✓
Work area lighting	✓	✓	✓
Chip conveyor including connection	×	✓	✓
Tool kit	✓	✓	✓
Steady's slide + steady rest – lower guideway	×	✓	✓
Accompanying documentation	✓	✓	✓
USB, Ethernet, (according to the type of control system)	✓	✓	✓
Electrical package 3 × 400V/50Hz	✓	✓	✓
Machine cooling distribution system - 17 bar – only preparation for the option	✓	✓	✓
Machine transportation means – links to lifting device	✓	✓	✓
Elements for levelling of the machine	✓	✓	✓

* only for axis Z

SPECIAL ACCESSORIES			
Machine state signalling	✓	✓	✓
Machine condition, failure and performance monitoring	✓	✓	✓
Manual rinsing of the work area	✓	✓	✓
Steady rest on common guideway with tailstock	×	✓	×
Switchboard cooling cooling – air conditioning	✓	✓	×
Portable panel with manual wheel	✓	✓	×
Tool holders	✓	✓	✓
Tool cooling 17 bar including connection, filtration	✓	✓	✓
Tool cooling 7 bar	✓	✓	✓
Collet-type chucking + accessories	✓	✓	×
Parts Catcher	✓	✓	×
Bar feeder (barstock magazine) adaptation, independent design modules	✓	✓	×
Barstock magazine	✓	✓	×
Tool measuring probe	✓	✓	✓
Vapor exhaustion from working space	✓	✓	✓
Adaptation for running centre for the sub-spindle	✓	✓	✓
Running centre – counterspindle	✓	✓	✓
Automatic opening of the sliding door	✓	✓	✓
Remote diagnostics	✓	✓	✓
Control system with HDD (Siemens)	✓	✓	✓
Fixture air blow – right headstock	✓	✓	×
Ejecting the parts out of the right headstock	✓	✓	×
Left chuck blowing	✓	✓	×
Left spindle lock	✓	✓	✓
Anchoring material	✓	✓	✓
Fixed centre Mo6	×	✓	✓
Fixed centre Mo5	✓	×	×
Lifting device	✓	✓	✓

Technical data **SP 280**

TECHNICAL DATA				SP 280				
					MC	Y	SMC	SY
Working space		Swing dia. over bed	mm	570	570	570	570	570
		Max. turning length	mm	550	550	550	450	450
		Max. turning dia.	mm	280	280	280	280	280
		Max. bar stock capacity - spindle with belt drive	mm	A6: Ø 63 A8: Ø 76	-	-	-	-
		Max. bar stock capacity - motor spindle	mm	-	A6: Ø 61	A6: Ø 61	A6: Ø 61	A6: Ø 61
Axis travels		Axes X_1 / Z_1	mm	241 / 640	241 / 640	241 / 640	241 / 640	241 / 640
		Axis Y_1	mm	-	-	±50	-	±50
		The right headstock Zs	mm	-	-	-	600	600
Rapid traverse		Osy X_1 / Z_1	$m.min^{-1}$	30 / 30	30 / 30	30 / 30	30 / 30	30 / 30
Main spindle	Belt drive	Max. speed	min^{-1}	A6: 4 700 A8: 4 000	-	-	-	-
	Motor spindle		min^{-1}	-	A6: 4 700	A6: 4 700	A6: 4 700	A6: 4 700
Counter spindle A5			min^{-1}	-	-	-	A5: 6 000	A5: 6 000
Tool head		Number of positions	-	12	12	12	12	12
		Hole dia. DIN 69 880	mm	40	40	40	40	40
		Max. speed of tool spindle	min^{-1}	-	4 000	4 000	4 000	4 000
Tailstock		Sleeve taper - MORSE	-	Mo 5	Mo 5	Mo 5	-	-
Spindle motor	Belt drive	Output S1 / S6 - 40%	kW	A6: 22 / 33 A8: 22 / 33	-	-	-	-
		Max. torque S1 / S6 - 40%	Nm	A6: 273 / 410 A8: 336 / 504	-	-	-	-
	Motor spindle	Output S1 / S6 - 40%	kW	-	20,9 / 27	20,9 / 27	20,9 / 27	20,9 / 27
		Max. torque S1 / S6 - 40%	Nm	-	200 / 257	200 / 257	200 / 257	200 / 257
	Counter spindle	Output S1 / S6 - 40%	kW	-	-	-	7,5 / 9	7,5 / 9
		Max. torque S1 / S6 - 40%	Nm	-	-	-	48 / 57	48 / 57
	Tool spindle	Output S3 - 40%	kW	-	8	8	8	8
		Max. torque S3 - 40%	Nm	-	40	40	40	40
Machine dimensions and weight		Length × width × heigth	mm	3 875 × 2 122 × 2 345				
		Weight	kg	7 200	7 500	7 700	7 800	7 900

The machine conforms to CE

In view of continuous machine development and innovation, specifi cations in this advertising material are subject to change without notice.

Technical data **SP 430**

TECHNICAL DATA					1100		
					A8 [A11]	A8 [A11]	A8 [A11]
					SP 430	SP 430 MC	SP 430 Y
Working space		Swing dia. over bed		mm	680		
		Swing dia over cross carriage		mm	470		480
		Max. turning length		mm	1100		
		Max. turning dia. - Upper turret		mm	550		
		Max. turning dia. - Lower tool turret		mm	-		
		Max. bar capacity - spindle with belt drive		mm	80 [90]		
Axis travels		X_1 / Z_1 Axes		mm	345 / 1225		325 / 1225
		X_2 / Z_2 Axes		mm	-		
		Y Axis		mm	-		+100 / -80
		W_2 Axis		mm	-		
		Maximum distance between spindles		mm	-		
Rapid traverse		X_1 / Z_1 / X_2 / Z_2 Axes		$m.min^{-1}$	30		
		Y Axis		$m.min^{-1}$	-		25
		Zs Axis		$m.min^{-1}$	-		
		W_2 Axis			-		
Main spindle		Max. speed		min^{-1}	3 800 [3 150]		
		C Axis	Max. speed	min^{-1}	-	73 [30]	
			Max. torque	Nm	-	132 [327]	
Counter spindle		Max. speed		min^{-1}	-		
		Indexing		°	-		
		Spindle nose (DIN 55026)		-	-		
Upper tool turret		Number of positions		-	12		
		Hole dia. VDI		mm	50		
		Max. speed of tool spindle		min^{-1}	-	4000	
Lower tool turret		Number of positions		-	-		
		Hole dia. VDI		mm	-		
		Max. speed of tool spindle		min^{-1}	-		
Tailstock		Sleeve taper - MORSE		-	5		
		Sleeve stroke		mm	160		
		Sleeve dia		mm	150		
Spindle motor	Main spindle	Output S1 / S6 - 40%		kW	17 / 25 [26 / 42]		
		Max. torque S1 / S6 - 40%		Nm	974 / 1433 [1 403 / 2 106]		
	Counter spindle	Output S1/ S6 - 40%		kW	-		
		Max. torque S1 / S6 - 40%		Nm	-		
	Tool spindle of the upper turret	Output S3 - 40%		kW	-	22,3	
		Max. torque S3 - 40%		Nm	-	71	
	Tool spindle of the lower turret	Output S3 - 40%		kW	-		
		Max. torque S3 - 40%		Nm	-		
Machine dimensions and weight		Length × width × height		mm	5033 × 2180 × 2264		
		Weight		kg	8300	8500	8700

1100								2500		
A11	A11	A11	A11	A11	A11	A11	A11	A11	A11	A11
SP 430 / 2	SP 430 MC / 2	SP 430 Y / 2	SP 430 SMC / 2	SP 430 SY / 2	SP 430 / L2	SP 430 MC / L2	SP 430 Y / L2	SP 430 L2	SP 430 MC / L2	SP 430 Y / L2
680								640		
470		480	470	480	470		480	470		480
1100			990		1100			2500		
550			466		550			550		
430			380		-			-		
90								90		
345 / 1225		325 / 1225	345 / 1225	325 / 1225	345 / 1225		325 / 1225	345 / 2625		325 / 2625
217 / 1215			194 / 1215		-			-		
-		+100 / -80	-	+80 / -80	-		+100 / -80	-		+100 / -80
-					975			2375		
-			1500		-			-		
30								30		
-		25	-	25	-		25	-		25
-			20		-			-		
-					30			30		
3150								3150		
-	30				-	30		-	30	
-	327				-	327		-	327	
-			3800		-			-		
-			3		-			-		
-			A8		-			-		
12								12		
50								50		
-	4000		3000		-	4000		-	4000	
8			12		-			-		
50					-			-		
-			3000		-			-		
5			-		5			5		
160			-		160			160		
150			-		150			150		
28 / 42								28 / 42		
1403 / 2106								1403 / 2106		
-			17 / 25		-			-		
-			325 / 477		-			-		
-	22,3				-	22,3		-	22,3	
-	71				-	71		-	71	
-			22,3		-			-		
-			71		-			-		
5591 × 2594 × 2402								7540 × 2670 × 2536		
12 000	12 200	12 500	13 000	13 500	12 000	12 200	12 500	16 000	16 200	16 500

The machine conforms to CE

In view of continuous machine development and innovation, specifi cations in this advertising material are subject to change without notice.

Technical data **SP 630**

TECHNICAL DATA				SP 630 / 1500	
				T	S
Working space	Max. swing over bed / lower support		mm	1 150 / 1 020	
	Max. turning diameter		mm	1020	
	Max. distance of faces (spindle to tailstock spindle I spindle to spindle)		mm	1 900	
	Max. turning length <Z-axis travel>		mm	1 700	
	Bar capacit		mm	122	
Workpiece weight	Overhung / supported with rotary center, incl. chuck (max. 300 rpm)		kg	1 000 / 2 500	
	Supported with steady rests 1 / 2 / 3 incl. chuck (max. 300 rpm)		kg	3 000 / - / -	
Linear axes of the tool spindle	X / Y <-Y/+Y> / Z axis travel		mm	530 / 200 <±100> / 1 700	
	Feed force X ; Y ; Z	40%ED / continuous	kN	12 / 9,3 ; 20,5 / 14,5 ; 20,5 / 14,5	
	X / Y / Z axis rapid traverse		$m.min^{-1}$	30 / 30 / 40	
	X / Y / Z axis acceleration		$m.s^{-2}$	4 / 4 / 4	
Main spindle	Max. spindle speed	Low speed	min^{-1}	720	
		High speed	min^{-1}	2 800	
	Nominal spindle speed		min^{-1}	1 750	
	Gear steps number			2	
	Spindle nose type (DIN 55026)			A11	
	Spindle boring		mm	135	
	I.D. of the front bearing		mm	200	
	Torque	Low speed 60% ED / continuous	Nm	3 283 / 2 736	
		High speed 60% ED / continuous	Nm	657 / 547	
	Motor power	60% ED / continuous	kW	49 / 41	
	Spindle axis height		mm	1 325	
Subspindle	Max. spindle speed	Low speed	min^{-1}	-	720
		High speed	min^{-1}	-	2 800
	Nominal spindle speed		min^{-1}	-	1 750
	Gear steps number			-	2
	Spindle nose type (DIN 55026)			-	A11
	Spindle boring		mm	-	135
	I.D. of front bearings		mm	-	200
	Torque	Low speed 60% ED / continuous	Nm	-	3 110 / 2 592
		High speed 60% ED / continuous	Nm	-	622 / 518
	Motor power	60% ED / continuous	kW	-	51,5 / 43
C-axis of workpiece spindles 1,2	Min. programming step			0,0001°	
	Max. speed		min^{-1}	30	
	Torque	40% ED / continuous	Nm	1 792 / 1 408	
	Brake		Nm	3 000 / 1 000	
Upper tool turret	Number of positions / live-tool positions		-	12 / 12	
	Torque	40% ED / continuous	Nm	67 / 48	
	Output	40% ED / continuous	kW	11,4 / 8,2	
	Max. live-tool speed		min^{-1}	4 000	
Lower tool turret	Number of positions / live-tool positions			-	12 / 12
	Max. live-tool speed		min^{-1}	-	67 / 48
	Torque 40% ED / continuous		Nm	-	11,4 / 8,2
	Output 40% ED / continuous		kW	-	4 000
	Limitation of swing diameter		mm	-	630
Tailstock	Tailstock spindle diameter / Tailstock spindle travel		mm	190 / 180	-
	Taper for rotary center	Morse		Mo6	-
	Thrust force range		kN	2,5 - 25	-
Coolant tank	Tank capacity / Coolant volume		l	500 / 700	
Machine dimensions	Machine length without / with chip conveyor / for transport		mm	6 630 / 7 900 / 6 630	
	Machine width / for transport		mm	5 150 / 3 100	
	Machine height / for transport		mm	3 100 / 3 000	
	Machine weight		kg	20 500 - 22 500	
Machine connection	Eletrical power supply	nominal	kVA	80 - 120	
	Compressed air supply	pressure / flow	MPa/L. min^{-1}	0,6 / 300	0,6 / 300
Control system	Type			Siemens Sinumerik 840D SL	
	Number of continuously controlled axes for machining			5	

SP 630 / 2000		SP 630 / 3000		SP 630 / 4500		SP 630 / 6000	
T	S	T	S	T	S	T	S
1 150 / 1 020		1 150 / 1 020		1 150 / 1 020		1 150 / 1 020	
1020		1020		1020		1020	
2 400		3 400		4 900		6 400	
2 200		3 200		4 700		6 100	
122		122		122		122	
1 000 / 2 500		1 000 / 2 500		1 000 / 2 500		1 000 / 2 500	
3 000 / - / -		3 000 / 3 000 / -		3 000 / 3 000 / 3 500		3 000 / 3 000 / 3 500	
530 / 200 <±100> / 2 200		530 / 200 <±100> / 3 200		530 / 200 <±100> / 4 700		530 / 200 <±100> / 6 100	
12 / 9,3 ; 20,5 / 14,5 ; 20,5 / 14,5		12 / 9,3 ; 20,5 / 14,5 ; 20,5 / 14,5		12 / 9,3 ; 20,5 / 14,5 ; 20,5 / 14,5		12 / 9,3 ; 20,5 / 14,5 ; 20,5 / 14,5	
30 / 30 / 40		30 / 30 / 40		30 / 30 / 40		30 / 30 / 40	
4 / 4 / 4		4 / 4 / 4		4 / 4 / 4		4 / 4 / 4	
720		720		720		720	
2 800		2 800		2 800		2 800	
1 750		1 750		1 750		1 750	
2		2		2		2	
A11		A11		A11		A11	
135		135		135		135	
200		200		200		200	
3 283 / 2 736		3 283 / 2 736		3 283 / 2 736		3 283 / 2 736	
657 / 547		657 / 547		657 / 547		657 / 547	
49 / 41		49 / 41		49 / 41		49 / 41	
1 325		1 325		1 325		1 325	
-	720	-	720	-	720	-	720
-	2 800	-	2 800	-	2 800	-	2 800
-	1 750	-	1 750	-	1 750	-	1 750
-	2	-	2	-	2	-	2
-	A11	-	A11	-	A11	-	A11
-	135	-	135	-	135	-	135
-	200	-	200	-	200	-	200
-	3 110 / 2 592	-	3 110 / 2 592	-	3 110 / 2 592	-	3 110 / 2 592
-	622 / 518	-	622 / 518	-	622 / 518	-	622 / 518
-	51,5 / 43	-	51,5 / 43	-	51,5 / 43	-	51,5 / 43
0,0001°		0,0001°		0,0001°		0,0001°	
30		30		30		30	
1 792 / 1 408		1 792 / 1 408		1 792 / 1 408		1 792 / 1 408	
3 000 / 1 000		3 000 / 1 000		3 000 / 1 000		3 000 / 1 000	
12 / 12		12 / 12		12 / 12		12 / 12	
67 / 48		67 / 48		67 / 48		67 / 48	
11,4 / 8,2		11,4 / 8,2		11,4 / 8,2		11,4 / 8,2	
4 000		4 000		4 000		4 000	
-	12 / 12	-	12 / 12	-	-	-	-
-	67 / 48	-	67 / 48	-	-	-	-
-	11,4 / 8,2	-	11,4 / 8,2	-	-	-	-
-	4 000	-	4 000	-	-	-	-
-	630	-	630	-	-	-	-
190 / 180	-	190 / 180	-	190 / 180	-	190 / 180	-
Mo6	-	Mo6	-	Mo6	-	Mo6	-
2,5 - 25	-	2,5 - 25	-	2,5 - 25	-	2,5 - 25	-
500 / 750		500 / 800		500 / 900		500 / 1000	
7 130 / 8 400 / 7 130		8 130 / 9 400 / 8 130		9 630 / 10 900 / 9 630		11 130 / 12 400 / 11 1300	
5 150 / 3 100		5 150 / 3 100		5 150 / 3 100		5 150 / 3 100	
3 100 / 3 000		3 100 / 3 000		3 100 / 3 000		3 100 / 3 000	
21 500 - 24 000		23 000 - 27 500		27 000 - 30 000		28 500 - 31 500	
80 - 120		80 - 120		80 - 120		80 - 120	
0,6 / 300	0,6 / 300	0,6 / 300	0,6 / 300	0,6 / 300	0,6 / 300	0,6 / 300	0,6 / 300
Siemens Sinumerik 840D SL		Siemens Sinumerik 840D SL		Siemens Sinumerik 840D SL		Siemens Sinumerik 840D SL	
5		5		5		5	

The machine conforms to CE

In view of continuous machine development and innovation, specifi cations in this advertising material are subject to change without notice.

Installation drawing **SP 280**

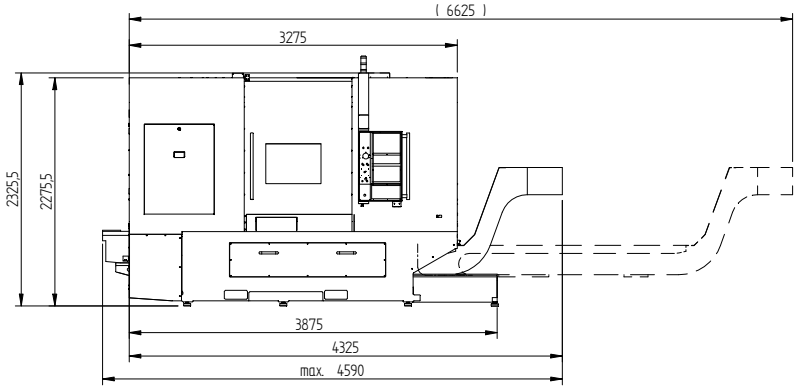

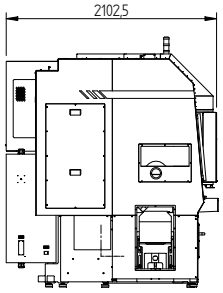

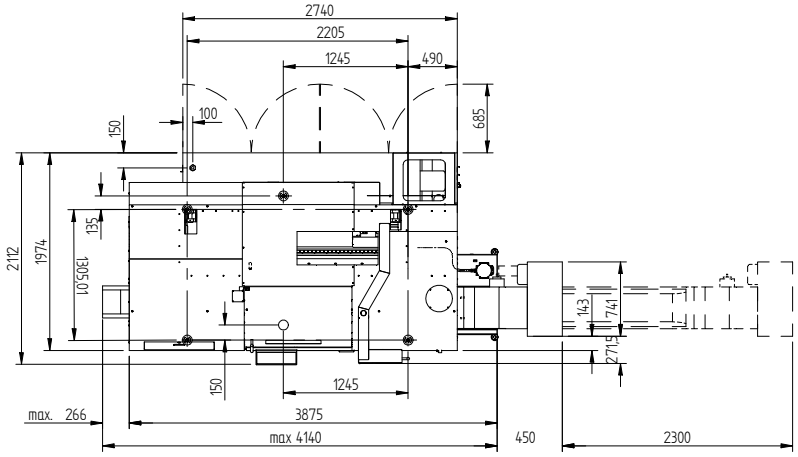

Installation drawing **SP 430**

SP 430, SP 430 MC, SP 430 Y, SP 430 / L2, SP 430 MC / L2, SP 430 Y / L2

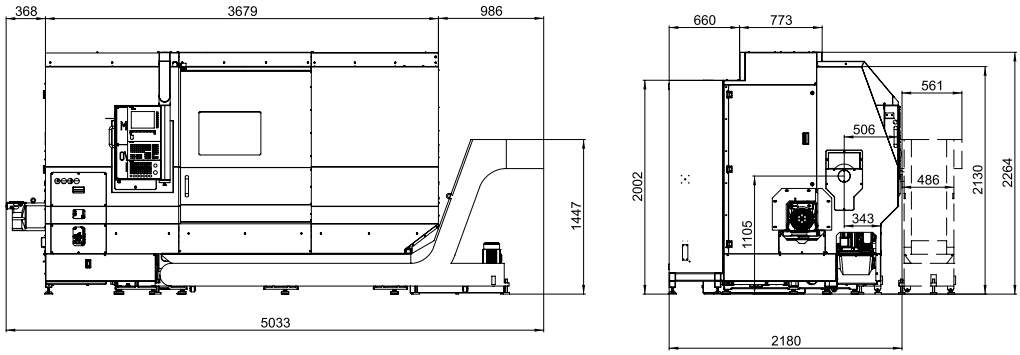

SP 430/2, SP 430 MC/2, SP 430 Y/2, SP 430 SY/2

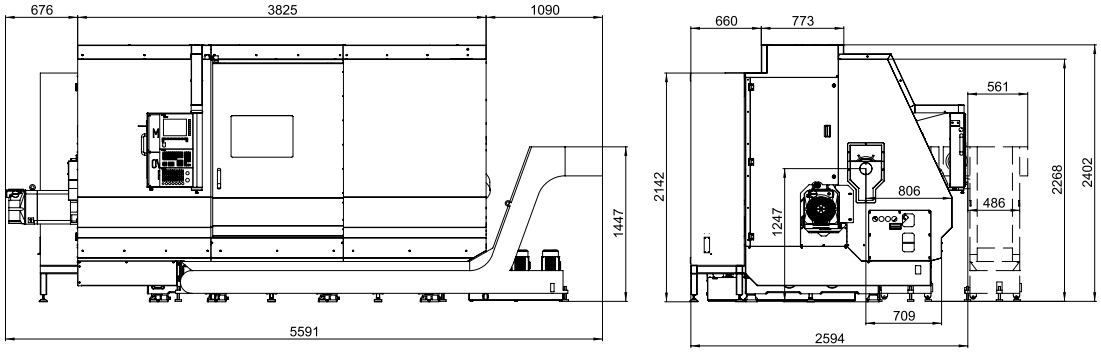

SP 430 L2/2500, SP 430 MC L2/2500 ,SP 430 Y/L2/2500

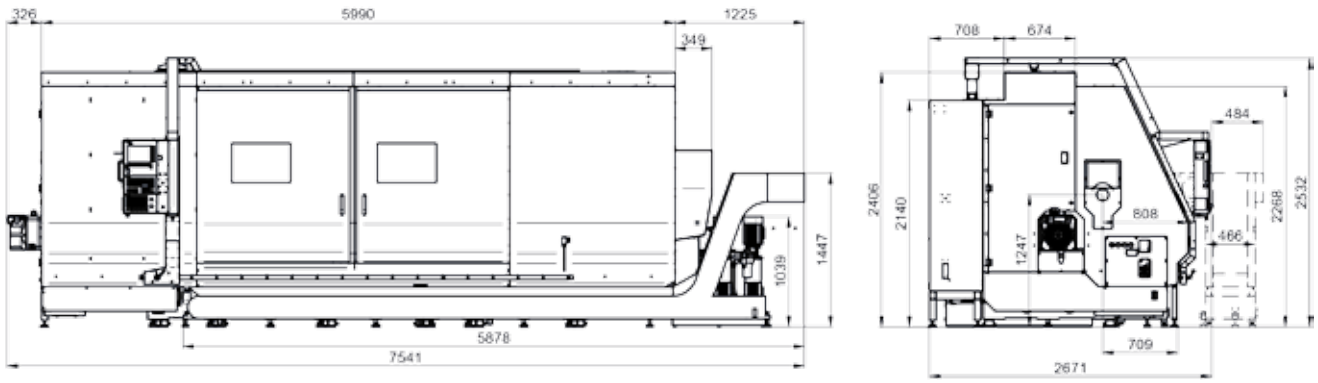

Installation drawing **SP 630**

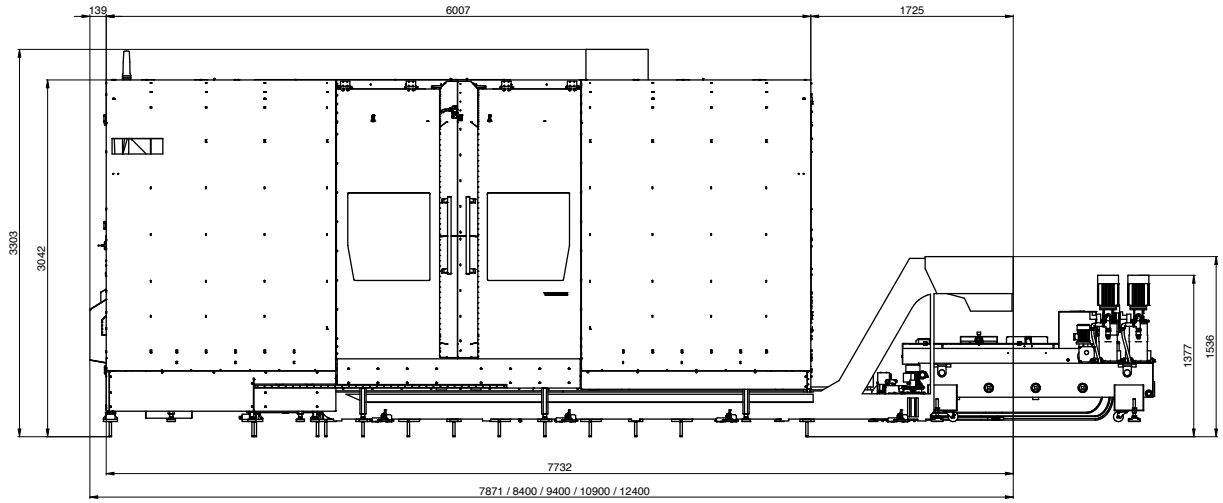

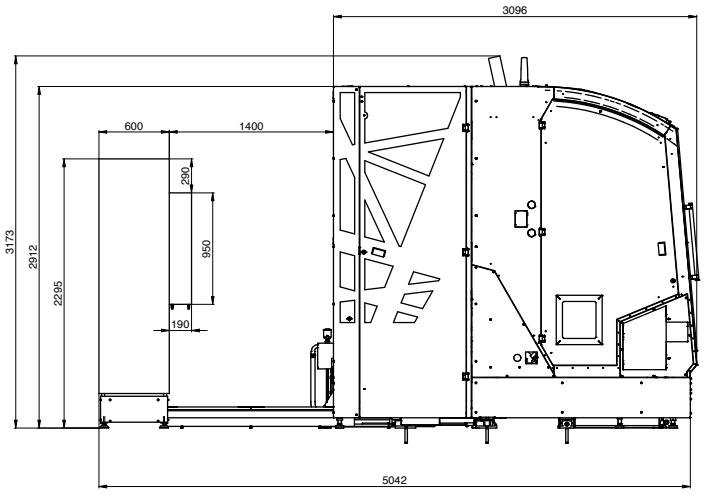

Remote diagnostics

⇒ complementary service that saves money

- Fastest technical and technological service for the customer
- Immediate "on-Line" contact with the customer's machine
- Inexpensive and reliable technical solution
- Experienced team of diagnosticians and application engineers - technologists

Remote diagnostics are the analysis of the machine's condition via communication software by a diagnostician. Using the communication software, the screen and the dialogue menu of the control system are remotely accessible via Internet. The actual communication software does not include any diagnostic tools. The service technician only remotely uses the internal diagnostic capabilities of the control system. The screen and the dialogue menu of the CNC are accessible from the service technician's computer at any distance. The technician not only monitors the current condition of the machine via his screen, but using the keyboard of his computer controls the CNC menu, transfers basically all data in both directions, and using the CHAT function communicates with the operator. During machine failure analysis, the technician utilises all diagnostic functions integrated in the CNC.

The goal of Remote diagnostics is to shorten the downtime of the machine by precisely targeting the subsequent servicing activity. This brings especially a reduction of customer's losses arising from the machine downtime.

MAS MACHINE MONITOR

⇒ Tool for increasing the productivity of your operation!

MAS MACHINE MONITOR is a software product that allows the customer to monitor the time utilisation of machine during the shift online or allows to view the operating status history and to subsequently take measures in production and logistics. All this is possible in the visualisation program that is installed in the customer's PC.

MAS MACHINE MONITOR an arguable leap increase of your operation's productivity = YOUR PATH TO COMPETITIVENESS ENHANCEMENT THANKS TO THE MAS!

Basic functions of the MAS MACHINE MONITOR:

- Monitoring of utilisation of any number of machines, possibility of machine classifying into groups (workplaces)
- Online display of machine status or browsing through utilisation history
- Number of made pieces, display of power circuit start interval – electricity saving measures
- Summary statistics for individual machines
- Important information for company management and production control

An option of the MAS MACHINE MONITOR is the MAS GSM MONITOR – monitoring of selected machine conditions via mobile phone operator network at selected phone numbers in the form of an SMS message. The employee can thus immediately react to an event even if he is not present near the machine at the moment.

Be independently and factually informed about the course of your jobs directly from the machine even during your physical absence from the company!

GSM MONITORING - function of the GSM MODULE:

Via the touch panel, it is possible to defi ne up to 5 phone numbers that can be used for monitoring and controlling of the machine.

SMS messages about machine condition changes are then sent to the entered phone numbers. The current condition of the machine can also be queried by sending an SMS reading "STATUS". The SMS can optionally be sent also upon meeting a certain condition (e.g. making a certain number of pieces etc.)

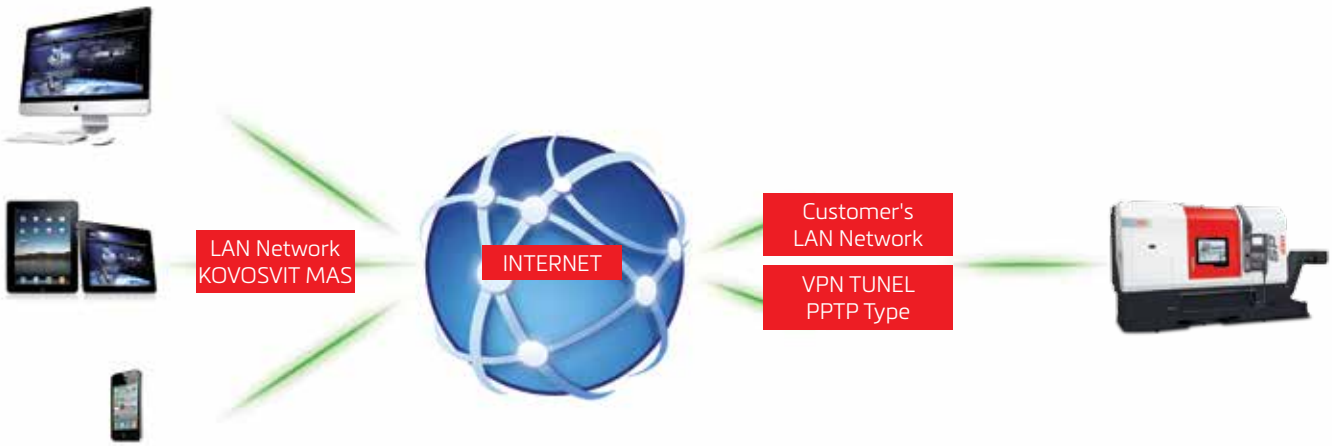

KOVOSVIT MAS, a.s.
náměstí Tomáše Bati 419, 391 02 Sezimovo Ústí
Czech Republic

T: +420 381 632 751, 381 632 586
F: +420 381 276 372
E: sale_export@kovosvit.cz

Service center MAS: +420 381 74 74 74

www.masmachinetools.com
http://references.kovosvit.cz

KOVOSVIT MAS
machine your future